ST–TYPE CONNECTOR

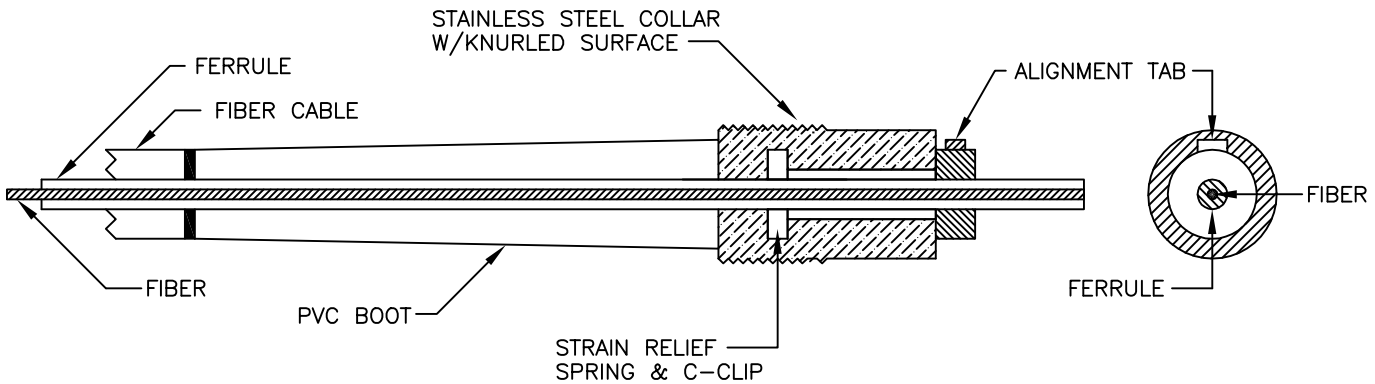

FIBER CROSS–SECTION

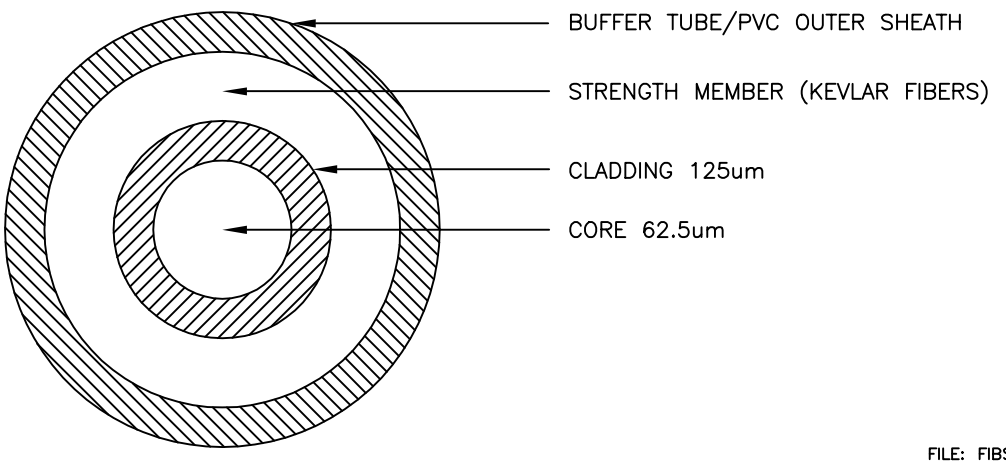

FILE: FIBST

Work Order	Posted By	Date	Work Description

UNIVERSITY of CALIFORNIA SANTA BARBARA

Dept: COMMUNICATIONS SERVICES
Drawn By: DBOOTH
Date: 4/17/00
DWG Notes:
Title: ST–TYPE CONNECTOR
DWG Notes:
File Name: FIBST
Checked by: FIBST